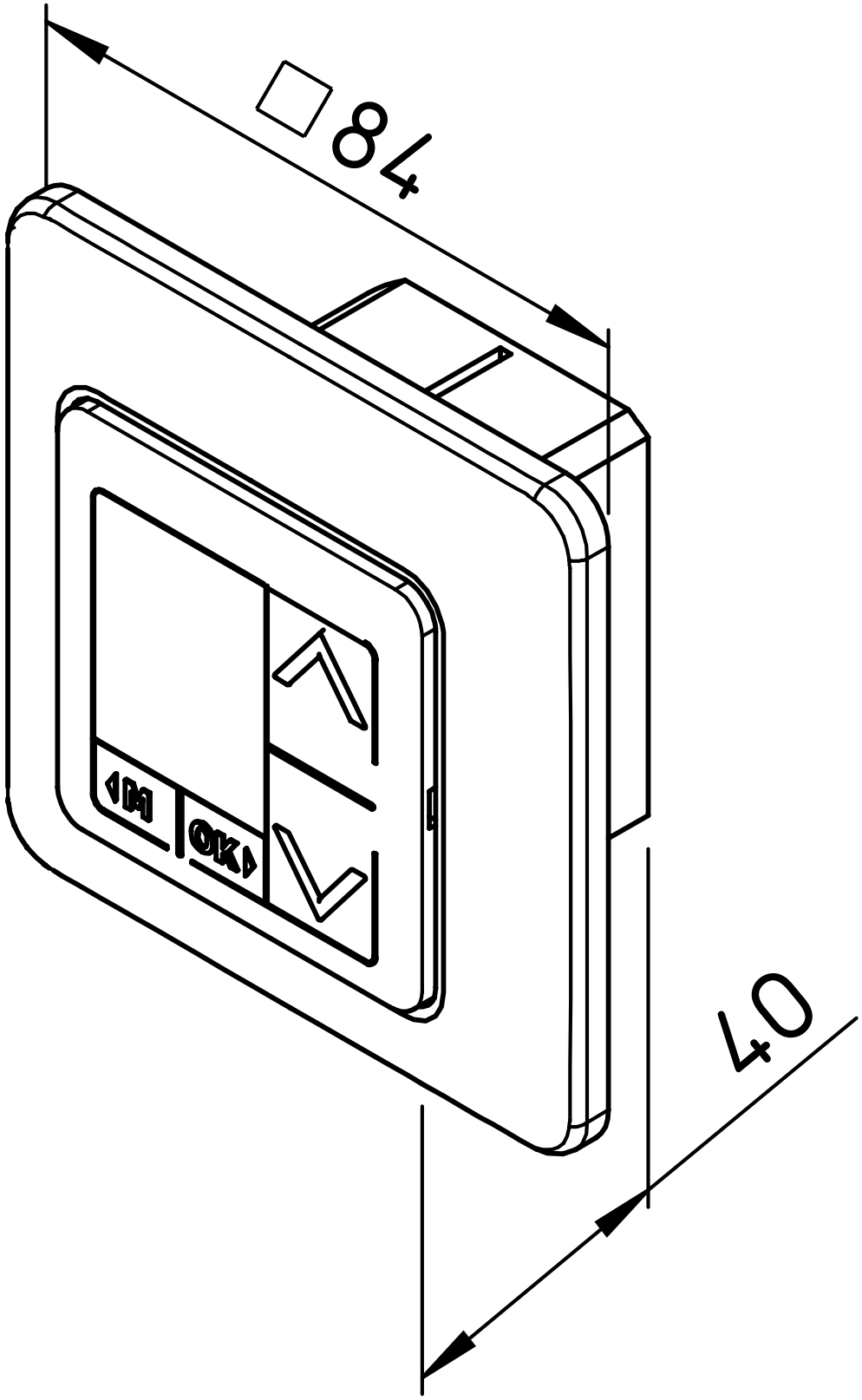
□84
M
OK
40